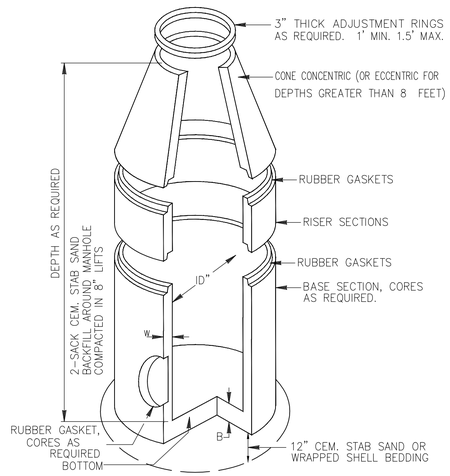

PRECAST SANITARY MANHOLE

N.T.S.

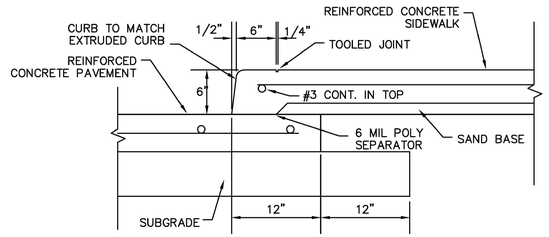

SIDEWALK AT PAVEMENT CURB

N.T.S.

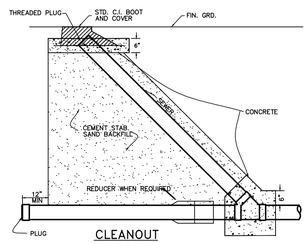

CLEANOUT

N.T.S.

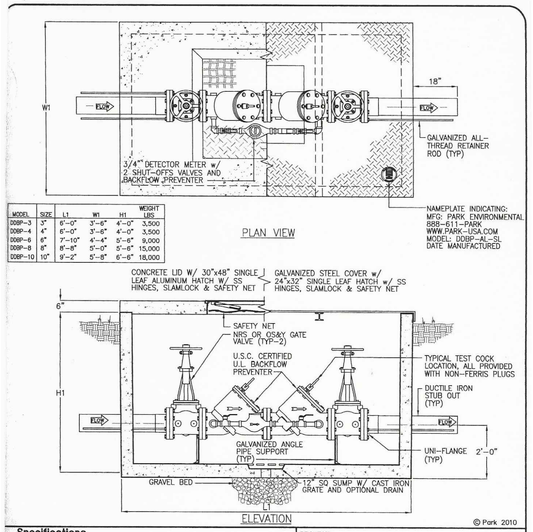

MODEL	SIZE	L1	W1	H1	WEIGHT LBS
DDBP-3	3"	6'-0"	3'-6"	4'-0"	3,500
DDBP-4	4"	6'-0"	3'-6"	4'-0"	3,500
DDBP-6	6"	7'-10"	4'-4"	5'-6"	9,000
DDBP-8	8"	8'-8"	5'-0"	5'-6"	15,000
DDBP-10	10"	9'-2"	5'-8"	6'-6"	18,000

Specifications

CONCRETE : Class II concrete with design strength of 4500 PSI at 28 days. Unit is of monolithic construction at floor and first stage of wall with sectional riser to required depth.

REINFORCEMENT: Grade 60 reinforced. Steel rebar conforming to ASTM A615 on required centers or equal.

STEEL COVER: 1/4" steel skid-resistant floor plate welded to 3" angle frame with (2) 3"x2-3/8" I beam supports (300 PSF).

HATCHWAY: 1/4" Aluminum diamond plate cover with extruded aluminum frame. Hatch to be furnished with 316 stainless steel snap lock & brass hinges.

Engineering Data

The backflow assembly shall be factory assembled in vault & hydrostatically tested prior to delivery. Field excavation & preparation shall be complete prior to delivery. Pipe, valves and fittings of the assembly shall be approved by one or more of the following associations:

PROJECT :
LOCATION:
CUSTOMER:
GEN.CONTR.:
ORDER # :
DATE:

PARK ENVIRONMENTAL EQUIPMENT 888-611-PARK www.park-USA.com

"Expect the Best"

DOUBLE DETECTOR BACKFLOW PREVENTER ASSEMBLY FOR FIRE SERVICE MODEL DDBP - 3" THRU 10"

SCALE NONE	DWG. NO. DDBP-AL-SL	REV. A
DATE 2010		

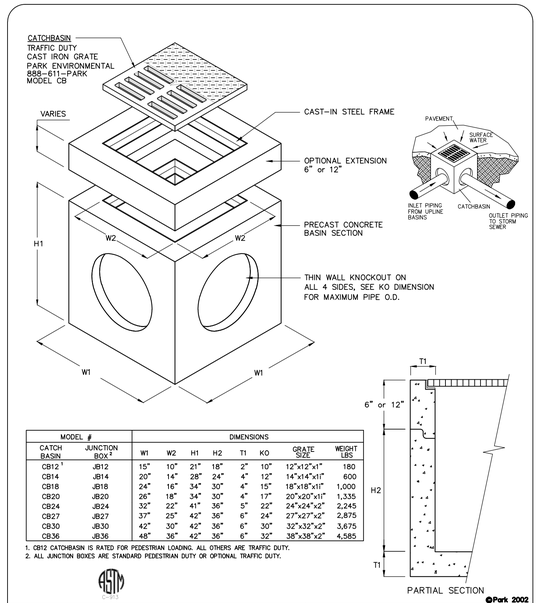

MODEL #		DIMENSIONS							
CATCH BASIN	JUNCTION BOX[2]	W1	W2	H1	H2	T1	KO	GRATE SIZE	WEIGHT LBS
CB12[1]	JB12	15"	10"	21"	18"	2"	10"	12"x12"x1"	180
CB14	JB14	20"	14"	28"	24"	4"	12"	14"x14"x1"	600
CB18	JB18	24"	16"	34"	30"	4"	15"	18"x18"x1"	1,000
CB20	JB20	26"	18"	34"	30"	4"	17"	20"x20"x1"	1,335
CB24	JB24	32"	22"	41"	36"	5"	22"	24"x24"x2"	2,245
CB27	JB27	37"	25"	42"	36"	6"	24"	27"x27"x2"	2,875
CB30	JB30	42"	30"	42"	36"	6"	30"	32"x32"x2"	3,675
CB36	JB36	48"	36"	42"	36"	6"	32"	38"x38"x2"	4,585

1. CB12 CATCHBASIN IS RATED FOR PEDESTRIAN LOADING. ALL OTHERS ARE TRAFFIC DUTY.
2. ALL JUNCTION BOXES ARE STANDARD PEDESTRIAN DUTY OR OPTIONAL TRAFFIC DUTY.

SPECIFICATIONS

CONCRETE : Class 1 concrete with of design strength of 4500 PSI at 28 days. Unit is of monolithic construction at floor and first stage of wall with sectional riser to required depth.

REINFORCEMENT: Grade 60 reinforced. Steel rebar conforming to ASTM A615 on required centers or equal.

C.I. CASTINGS: Cast iron frames and grates are manufactured of grey cast iron conforming to ASTM A48-76 Class 35.

PARK ENVIRONMENTAL EQUIPMENT 888-611-PARK www.park-USA.com

"Expect the Best"

CATCHBASIN MODEL CB - 12" THRU 36"
JUNCTION BOX MODEL JB - 12" THRU 36"

SCALE NONE	DWG. NO. CBJB36	REV. A
DATE 01/08		

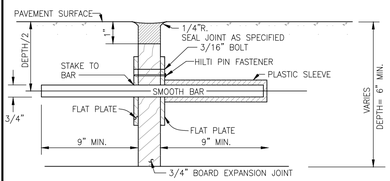

STEEL TO MEET ASTM STD. SPEC. FOR CONC. REBAR UNIT TO BE 24" C-C, AND 10" MIN.

DOWEL TYPE EXPANSION JOINT

N.T.S.

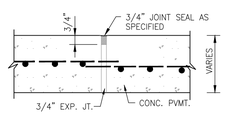

CONSTRUCTION JOINT SEAL

N.T.S.

THE LOCATION OF CONSTRUCTION JOINTS AND DEFORMED STRIPS MAY BE VARIED, WITH THE APPROVAL OF THE DEPARTMENT OF PUBLIC WORKS, TO SUIT THE PROPOSED CONSTRUCTION METHODS OF THE CONTRACTOR. MAXIMUM SPACING FOR LONGITUDINAL CONTROL JOINTS IS 15'-0".

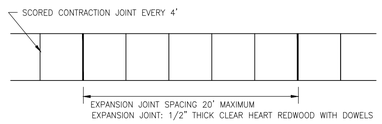

SIDEWALK JOINT DETAILS

N.T.S.

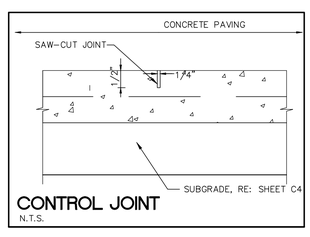

CONTROL JOINT

N.T.S.

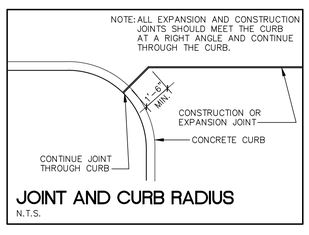

JOINT AND CURB RADIUS

N.T.S.

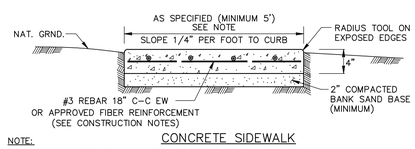

CONCRETE SIDEWALK

NOTE:
BANK SAND IS DEFINED AS A WELL-GRADED SAND, FREE OF SILT, CLAY, LOAM, FRIABLE OR SOLUBLE MATERIALS AND ORGANIC MATTER, MEETING THE UNIFIED SOILS CLASSIFICATION SYSTEM GROUP SYMBOL SW CRITERIA W/ A PLASTICITY INDEX OF ≤ 10. AND NO MORE THAN 12% OF MATERIAL CAN PASS THE No. 200 SIEVE.

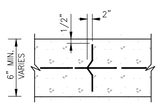

DEFORMED METAL STRIP

N.T.S.

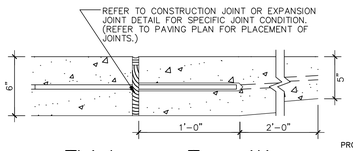

Thickness Transition

SCALE: N.T.S.

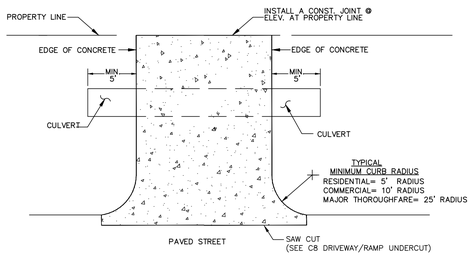

OPEN DITCH CONCRETE DRIVEWAY PLAN

(USED ONLY WHEN CONNECTING TO A CONCRETE ROADWAY)

N.T.S.

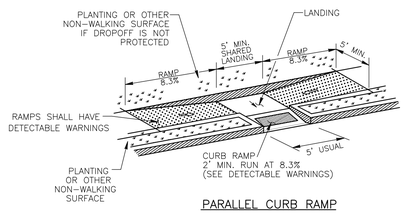

PARALLEL CURB RAMP

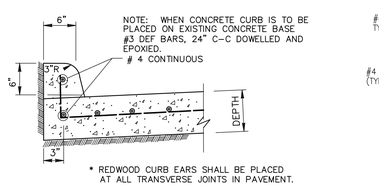

* REDWOOD CURB EARS SHALL BE PLACED AT ALL TRANSVERSE JOINTS IN PAVEMENT.

CONCRETE CURB

N.T.S.

NOTE:
ALL NEW CURB REQUIRES 3,000 P.S.I. @ 28-DAYS, AND A MINIMUM OF 1-LB/CY OF APPROVED POLYROYLENE FIBER MESH.

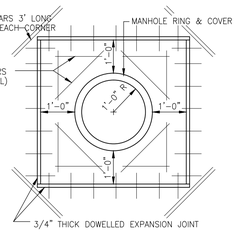

MANHOLE BLOCKOUT

N.T.S.

(STORM & SANITARY) IN PAVEMENT

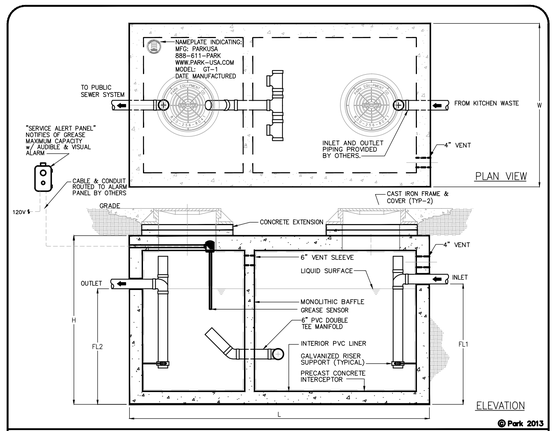

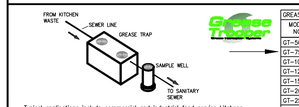

Typical applications include commercial and industrial food service kitchens where excessive grease may interfere with the proper drainage of the sewer system. The grease interceptor is generally buried below grade for gravity flow sewer systems. A sample well is utilized on the outlet side for sampling by the local water authority.

GREASE INTERCEPTOR SCHEDULE								
MODEL NO.	CAPACITY USGal	GREASE CAP. (LBS)	EMPTY WT (LBS)	LENGTH L	WIDTH W	HEIGHT H	INLET FL1	OUTLET FL2
GT-500	500	1,200	9,500	7'-10"	4'-4"	4'-6"	3'-3"	3'-0"
GT-750	750	1,700	9,900	7'-10"	4'-4"	6'-0"	4'-5"	4'-2"
GT-1000	1,000	2,300	13,350	8'-8"	5'-0"	6'-0"	4'-9"	4'-6"
GT-1250	1,250	2,900	14,650	9'-2"	5'-8"	6'-0"	4'-9"	4'-6"
GT-1500	1,500	3,500	16,050	9'-2"	5'-8"	7'-0"	5'-9"	5'-6"
GT-2000	2,000	4,600	21,250	9'-0"	6'-0"	8'-0"	6'-9"	6'-6"
GT-2500	2,500	5,700	27,050	13'-0"	7'-0"	7'-0"	5'-9"	5'-6"
GT-3000	3,000	6,900	33,150	13'-0"	7'-0"	8'-0"	6'-9"	6'-6"
GT-3500	3,500	8,000	38,550	13'-0"	7'-0"	8'-6"	7'-3"	7'-0"
GT-4000	4,000	9,300	38,100	16'-0"	8'-6"	7'-0"	5'-9"	5'-6"

OTHER SIZES ARE AVAILABLE. CONTACT US FOR MORE INFORMATION

Specifications

CONCRETE : Class I/II concrete with design strength of 4500 PSI at 28 days. Unit is of monolithic construction at floor, first stage of wall and baffle with sectional riser to required depth. (Monolithic baffle required, slide-in type is not acceptable)

REINFORCEMENT: Grade 60 reinforced with steel rebar conforming to ASTM A615 on required centers or equal.

C.I. CASTINGS: Manhole frames, covers or grates are manufactured of grey cast iron conforming to ASTM A48-76 Class 30. Manhole shall be nominal 24 inch diameter and be traffic duty.

Engineering Data

The grease interceptor is structurally & hydraulically engineered to conform to UPC/IPC and regional plumbing codes recommended in most cities. Consult with local authorities for specific application requirements.

Shop drawings shall include complete structural & bouyancy calculations certified by a licensed professional engineer upon request.

Consult with Park Equipment Company for exact excavation dimensions & shipping information.

888.611.7275 www.park-usa.com PARK UTA Design for Water

GREASE INTERCEPTOR SERIES GT 500 THRU 4000 GALLON CAPACITY

SCALE NONE	DWG. NO. GT-1	REV. A
DATE 03/13		

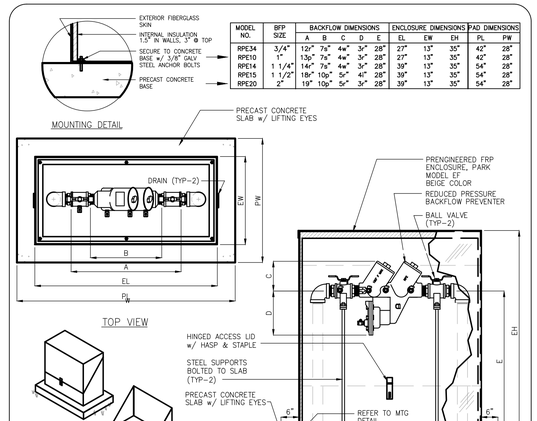

MODEL NO.	BFP SIZE	BACKFLOW DIMENSIONS				ENCLOSURE DIMENSIONS		PAD DIMENSIONS	
		A	B	C	D	E	EL	EW	EH	PL	PW
RPE34	3/4"	12"	7"	4"	3"	28"	27"	13"	35"	42"	28"
RPE10	1"	13"	7"	4"	3"	28"	27"	13"	35"	42"	28"
RPE14	1 1/4"	14"	7"	4"	3"	28"	39"	13"	35"	54"	28"
RPE15	1 1/2"	18"	10"	5"	4"	28"	39"	13"	35"	54"	28"
RPE20	2"	19"	10"	5"	3"	28"	39"	13"	35"	54"	28"

Specifications

CONCRETE : Class 1 concrete with design strength of 4500 PSI at 28 days.

REINFORCEMENT: Grade 60 reinforced. Steel rebar conforming to ASTM A615 on required centers or equal.

Typical Applications

RP devices are used to protect against high hazard (toxic) fluids in water services to industrial plants, hospital facilities, morgues, mortuaries, and chemical plants. They are also used in irrigation systems, boiler feed, water lines and other installations requiring maximum protection.

Engineering Data

The backflow assembly shall be factory assembled on pad & hydrostatically tested prior to delivery. Field excavation & preparation shall be complete prior to delivery. Pipe, valves and fittings of the assembly shall be approved by one or more of the following associations:

PROJECT :
CUSTOMER :
ARCHITECT :
ENGINEER :
ORDER # :
DATE :

PARK ENVIRONMENTAL EQUIPMENT 800-256-8041 www.park-USA.com

"Expect the Best"

REDUCED PRESSURE BACKFLOW PREVENTER ON PRECAST CONCRETE PAD

SCALE NONE	DWG. NO. RPBPAE-1	REV. A
DATE 01/02		

REVISIONS AND ISSUANCE

NO.	DATE	DESCRIPTION

IVY KIDS EARLY LEARNING CENTER

4434 CR 94
MANVEL, TEXAS 77578

MISSION ENGINEERING INC.
10370 RICHMOND AVE, #560
HOUSTON, TEXAS 77042
[T] 713-981-0018
[E] dzhuang@missioneng.com
TPEF Registration No. F-11771

STATE OF TEXAS
YIFENG ZHUANG
87950
PROFESSIONAL ENGINEER
02/22/2019

DRAWING TITLE

DETAILS

DRAWN BY KN	CHECKED BY EL
DATE 02/22/2019	JOB NO. 1806251

DRAWING NO.

C11